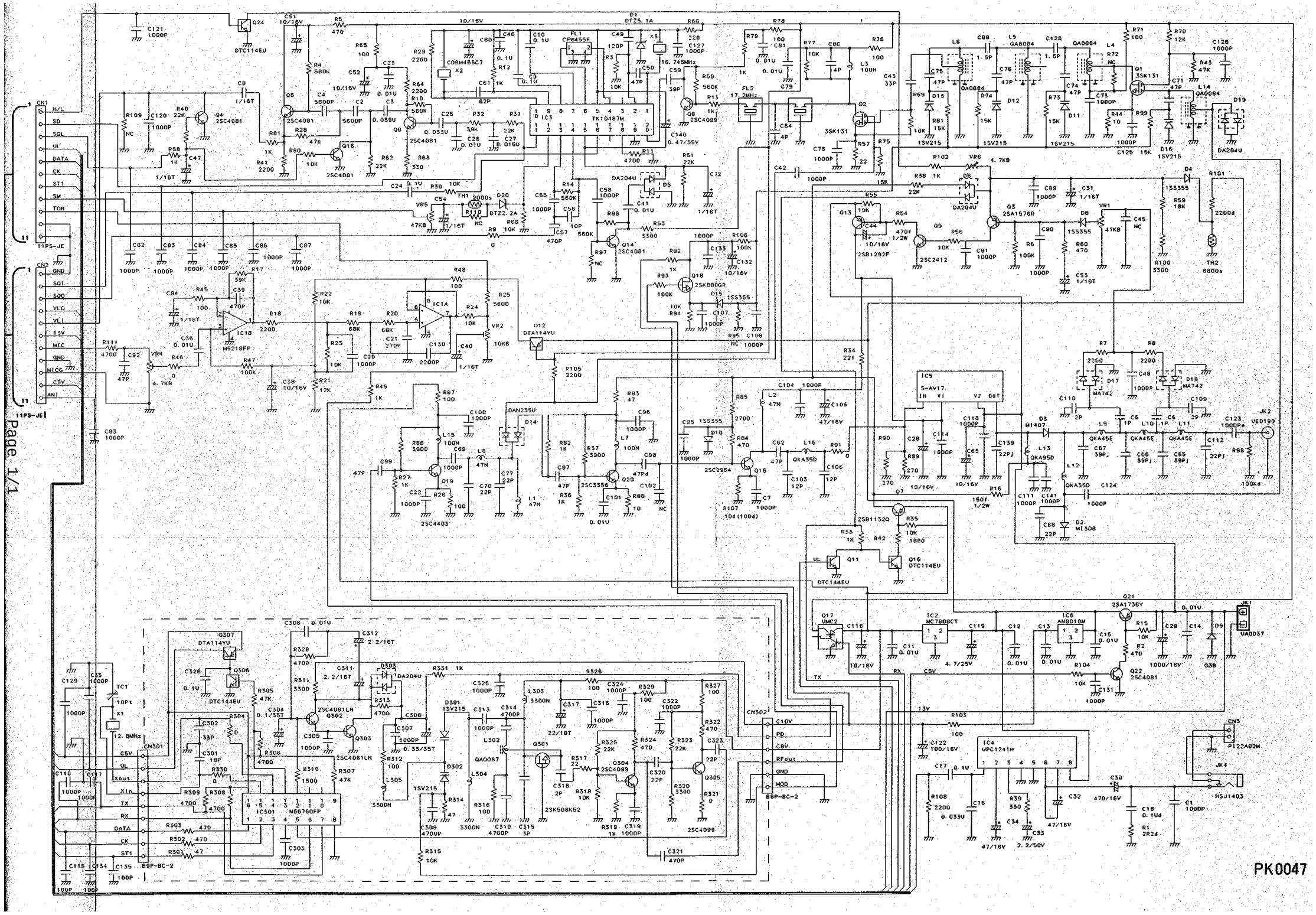
CN1
H/L
SD
SQL
UL
DATA
CK
ST1
SM
TON
11PS-JE
CN2
GND
SQI
SQO
VLO
VLI
13V
MIC
GND
MICG
C5V
ANI
11PS-JE
IC1
TK10487M
IC1A
IC1B
M5218FP
IC3
M56760FP
IC5
S-AV17
IC2
MC7808CT
IC6
AN8010M
IC4
UPC1241H
CN301
CN302
B9P-BC-2
B6P-BC-2
TX
RX
C5V
13V
PK0047

Page 1/1

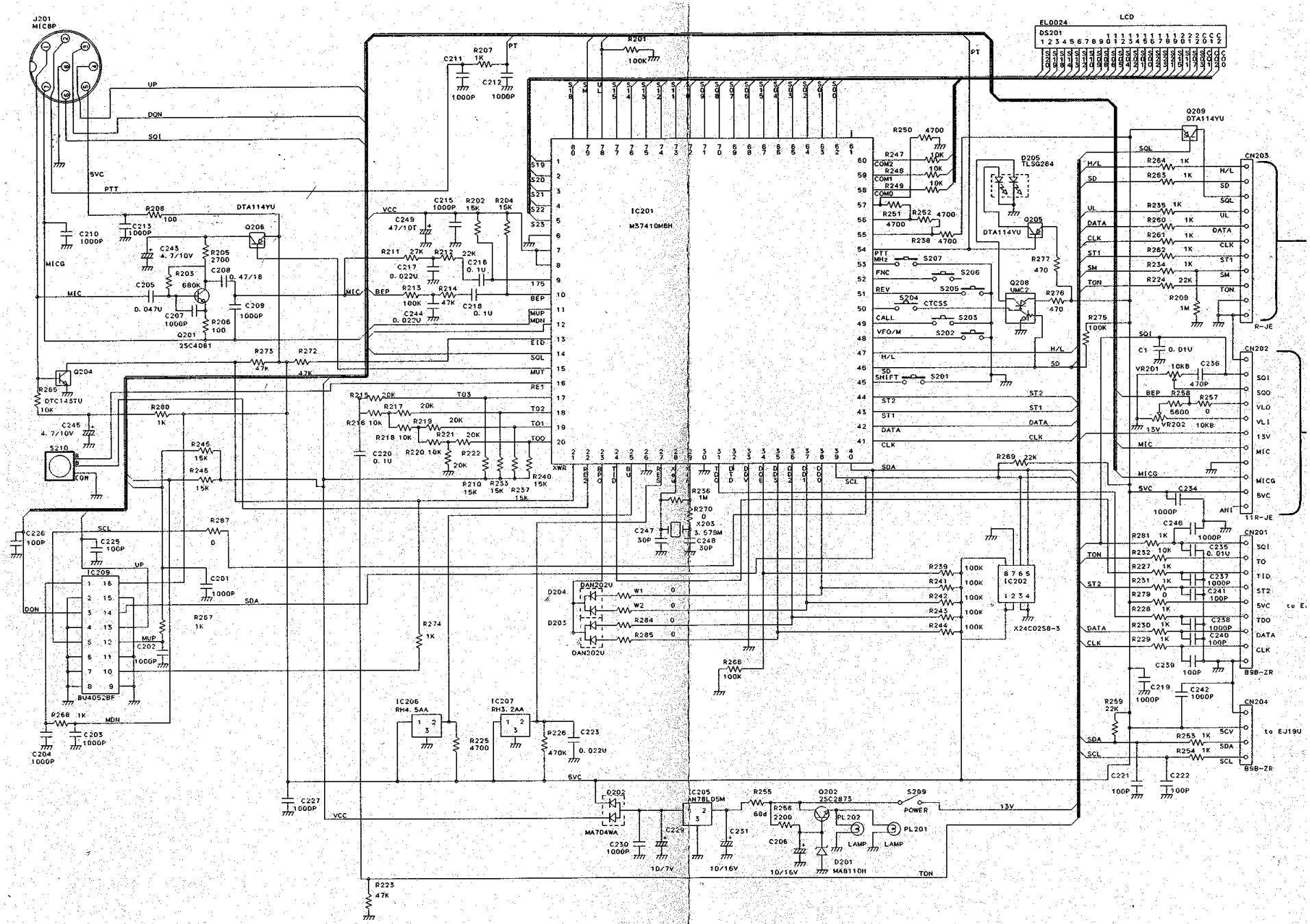

SCHEMATIC DIAGRAM DR-130

Specifications are subject to change without notice or obligation.