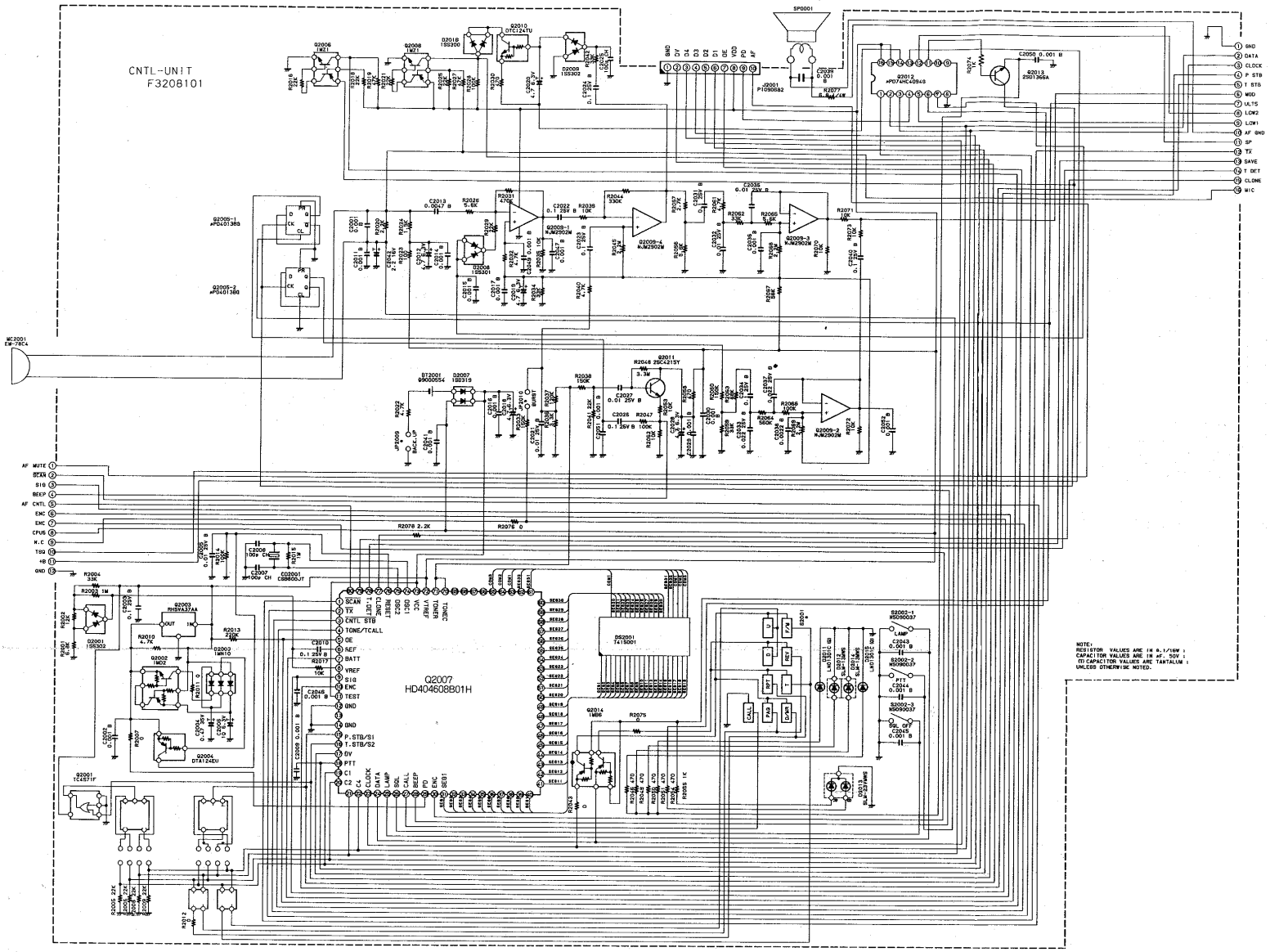
CNTL-UNIT
F3208101
Q2007
HD404608B01H
NOTE:
RESISTOR VALUES ARE IN Ω, 1/16W :
CAPACITOR VALUES ARE IN μF, 50V :
(T) CAPACITOR VALUES ARE TANTALUM :
UNLESS OTHERWISE NOTED.

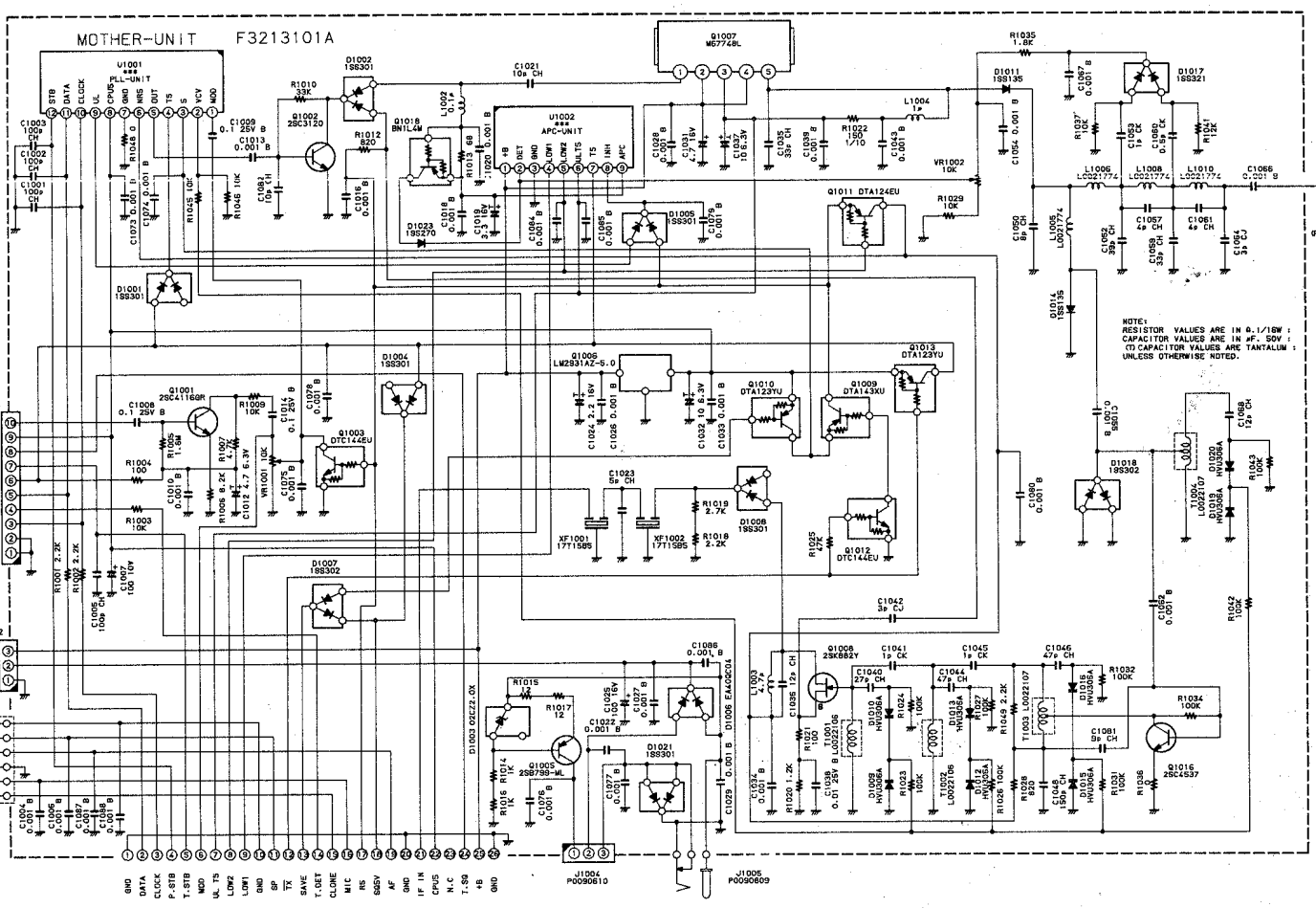
MOTHER-UNIT F3213101A
NOTE:
RESISTOR VALUES ARE IN Ω.1/16W ;
CAPACITOR VALUES ARE IN μF, 50V ;
(T) CAPACITOR VALUES ARE TANTALUM ;
UNLESS OTHERWISE NOTED.

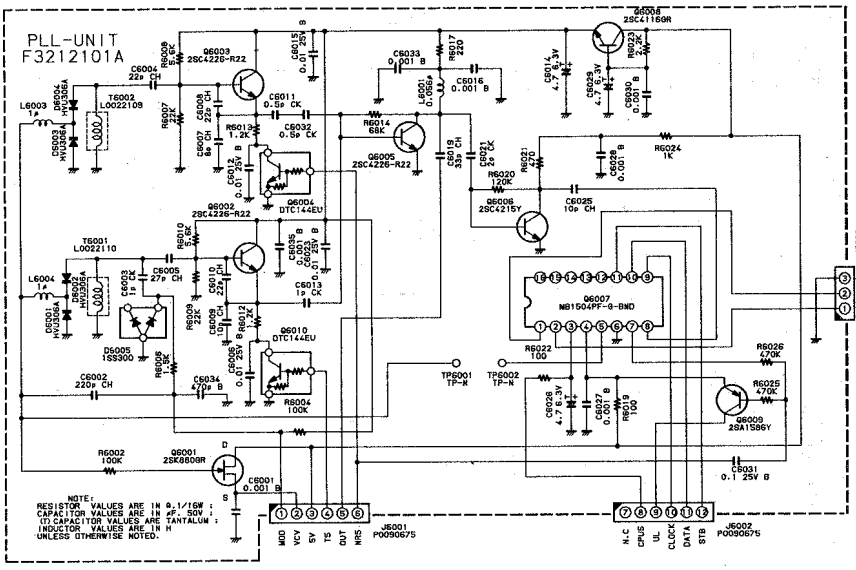
PLL-UNIT
F3212101A
NOTE:
RESISTOR VALUES ARE IN Ω.1/16W ;
CAPACITOR VALUES ARE IN μF, 50V ;
(T) CAPACITOR VALUES ARE TANTALUM ;
INDUCTOR VALUES ARE IN H
UNLESS OTHERWISE NOTED.

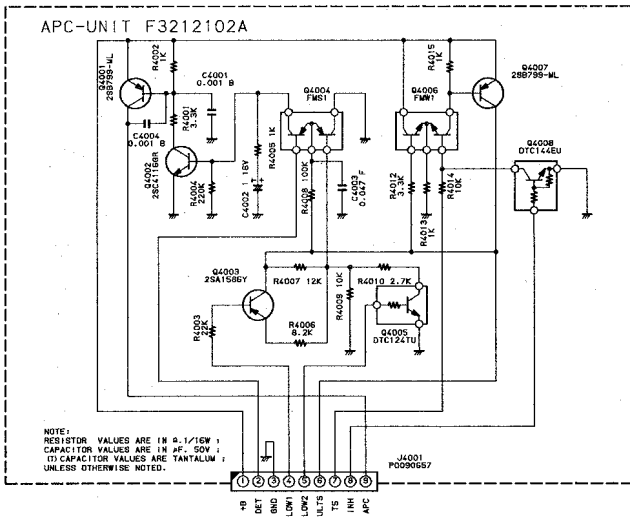
APC-UNIT F3212102A
NOTE:
RESISTOR VALUES ARE IN Ω.1/16W ;
CAPACITOR VALUES ARE IN μF, 50V ;
(T) CAPACITOR VALUES ARE TANTALUM ;
UNLESS OTHERWISE NOTED.

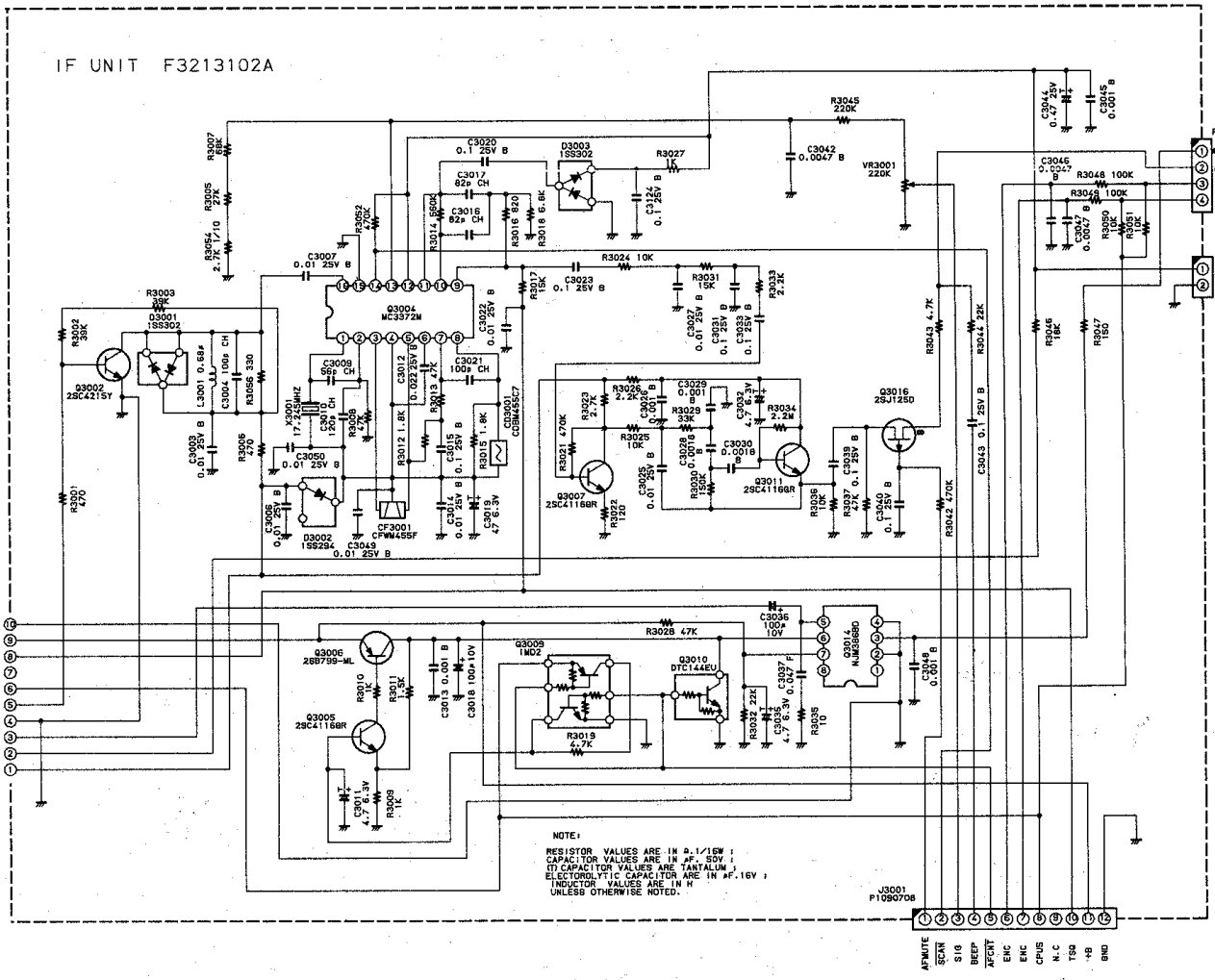
IF UNIT F3213102A
NOTE:
RESISTOR VALUES ARE IN Ω.1/16W ;
CAPACITOR VALUES ARE IN μF. 50V ;
(T) CAPACITOR VALUES ARE TANTALUM ;
ELECTOROLYTIC CAPACITOR ARE IN μF.16V ;
INDUCTOR VALUES ARE IN H
UNLESS OTHERWISE NOTED.

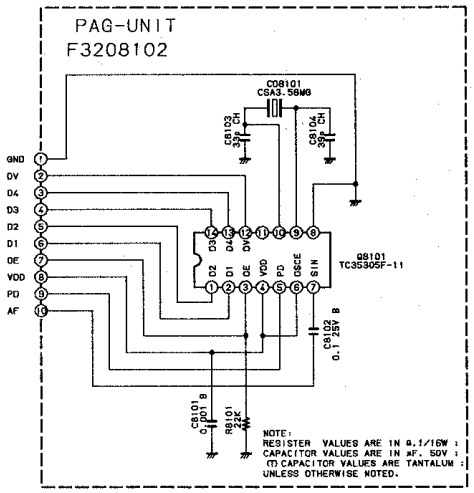
PAG-UNIT
F3208102
NOTE:
RESISTER VALUES ARE IN Ω.1/16W ;
CAPACITOR VALUES ARE IN μF. 50V ;
(T) CAPACITOR VALUES ARE TANTALUM ;
UNLESS OTHERWISE NOTED.

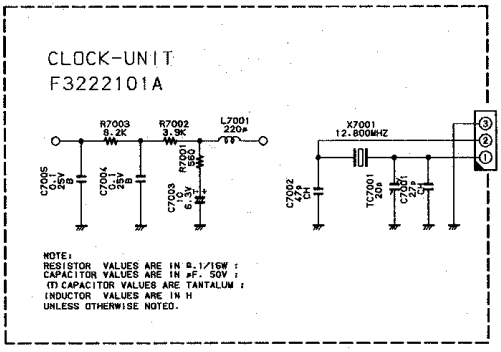
CLOCK-UNIT
F3222101A
NOTE:
RESISTOR VALUES ARE IN Ω.1/16W ;
CAPACITOR VALUES ARE IN μF. 50V ;
(T) CAPACITOR VALUES ARE TANTALUM ;
INDUCTOR VALUES ARE IN H
UNLESS OTHERWISE NOTED.

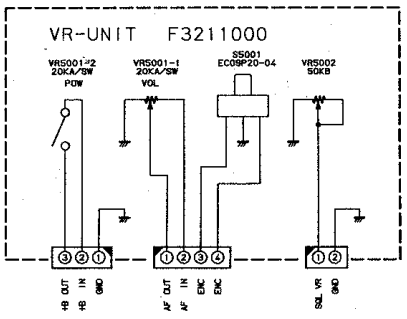
VR-UNIT F3211000